power

File: power.kicad_sch

USB3

File: USB3.kicad_sch

extension

File: extension.kicad_sch

FPGA

File: FPGA.kicad_sch

Sheet: /
File: main_board.kicad_sch

Title:

Size: A4	Date:	**Rev:**
KiCad E.D.A. 10.0.0		Id: 1/5

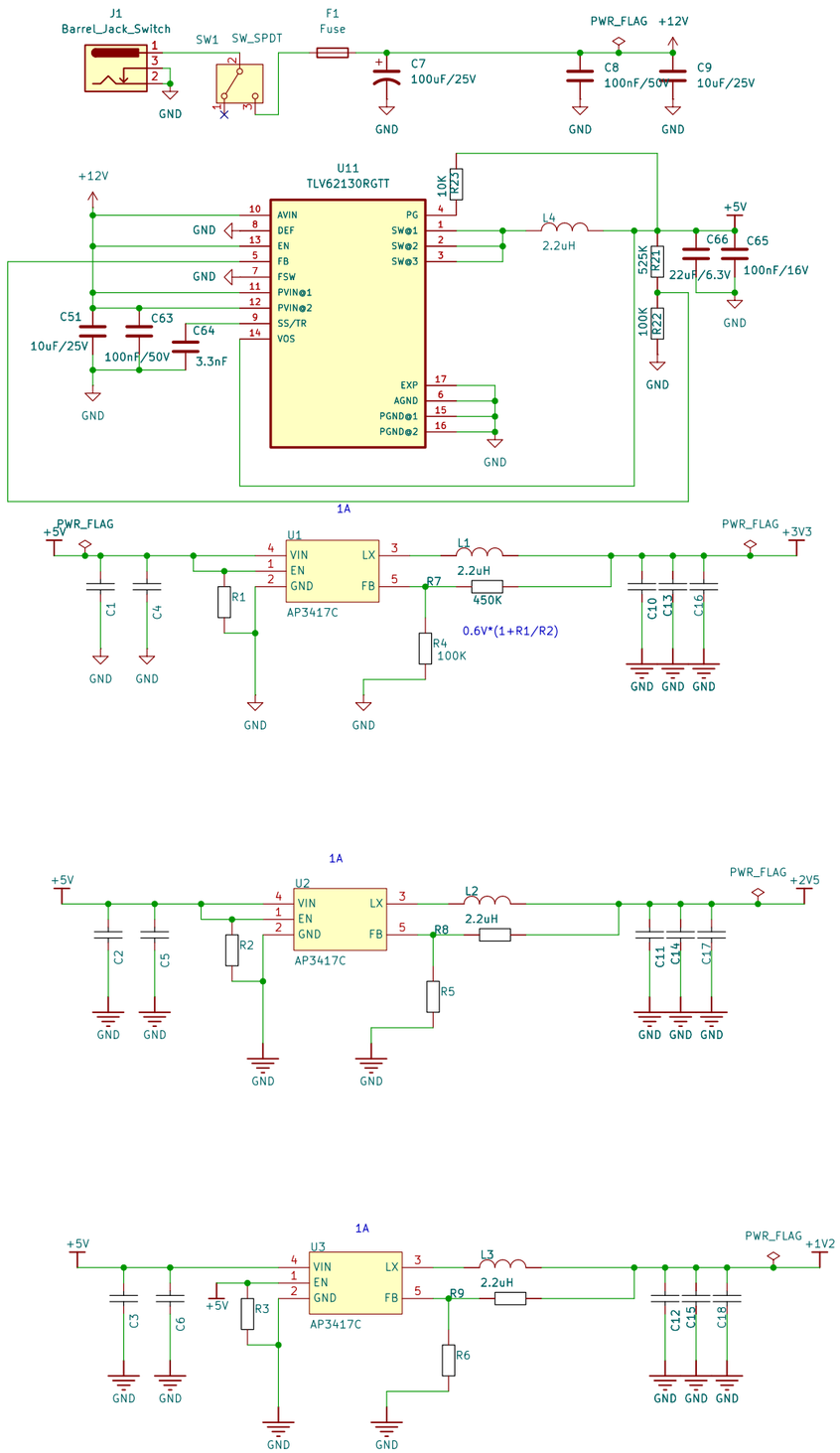

5V <350mAx2 IMX477
3.3V <150mAx2 Buck (AP3417)2xJTAG/UART
2.5V ~40mA Buck (AP3417)MC20901 Data. Efficiency.
1.2V ~0.6A Buck (AP3417)FX3 Core. Heat management.
1.2V ~2mA LDO (from 1.8V) MC20901 VDD (1.2V Core)
1.8V <0.2A LDO (from 3.3V) FX3 I/O. Noise sensitive.

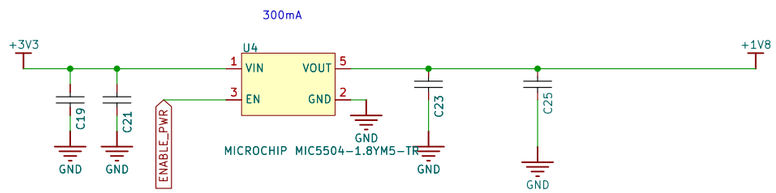

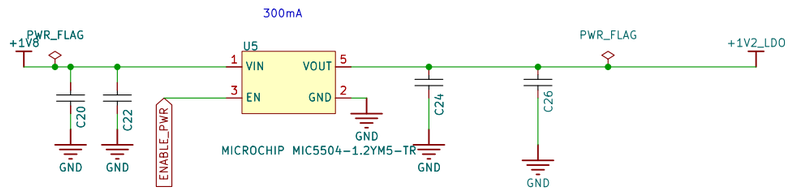

Sheet: /power/
File: power.kicad_sch

Title:

Size: A3	Date:	Rev:
KiCad E.D.A. 10.0.0		Id: 2/5

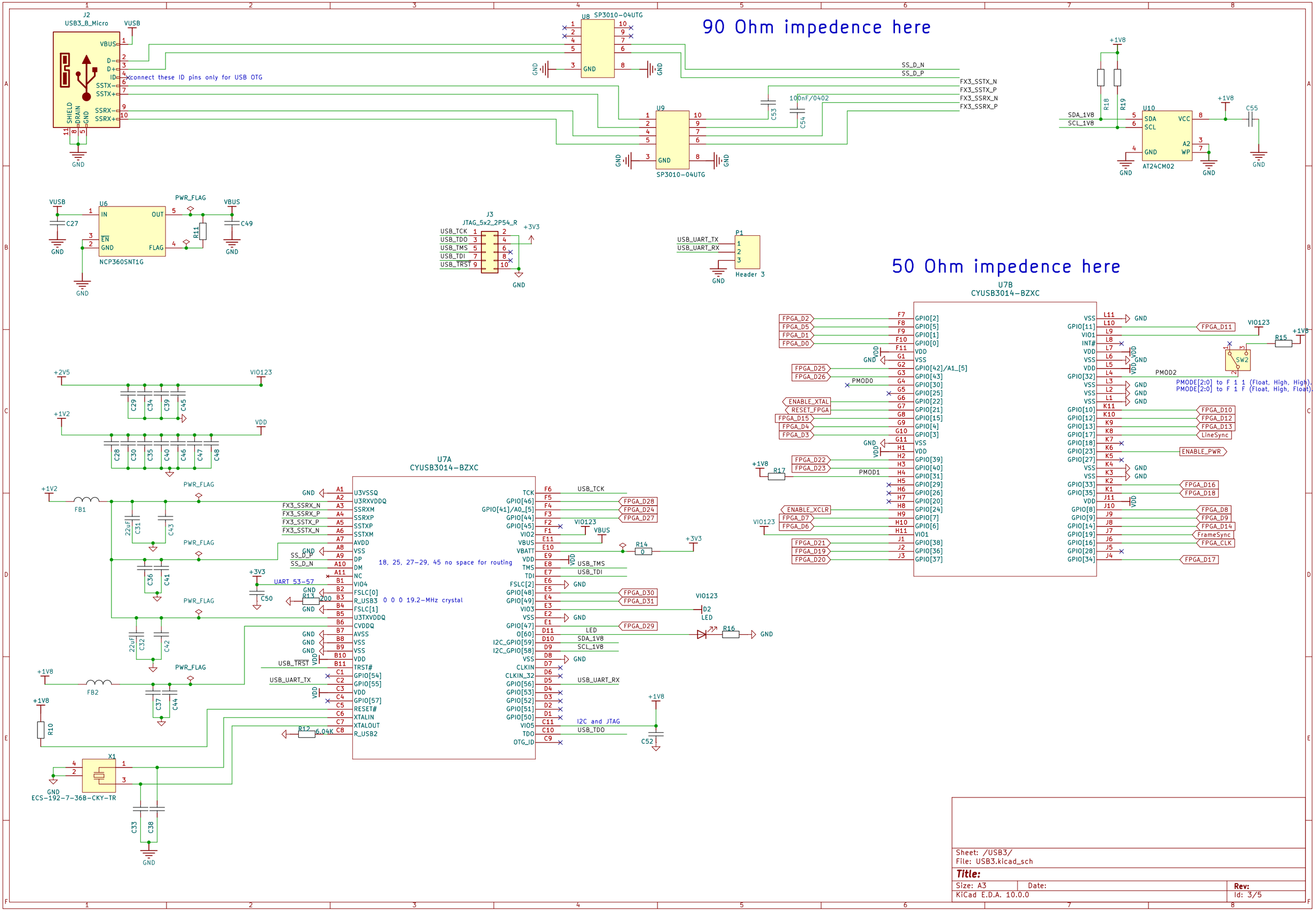

Sheet: /USB3/
File: USB3.kicad_sch

Title:

Size: A3	Date:	Rev:
KiCad E.D.A. 10.0.0		Id: 3/5

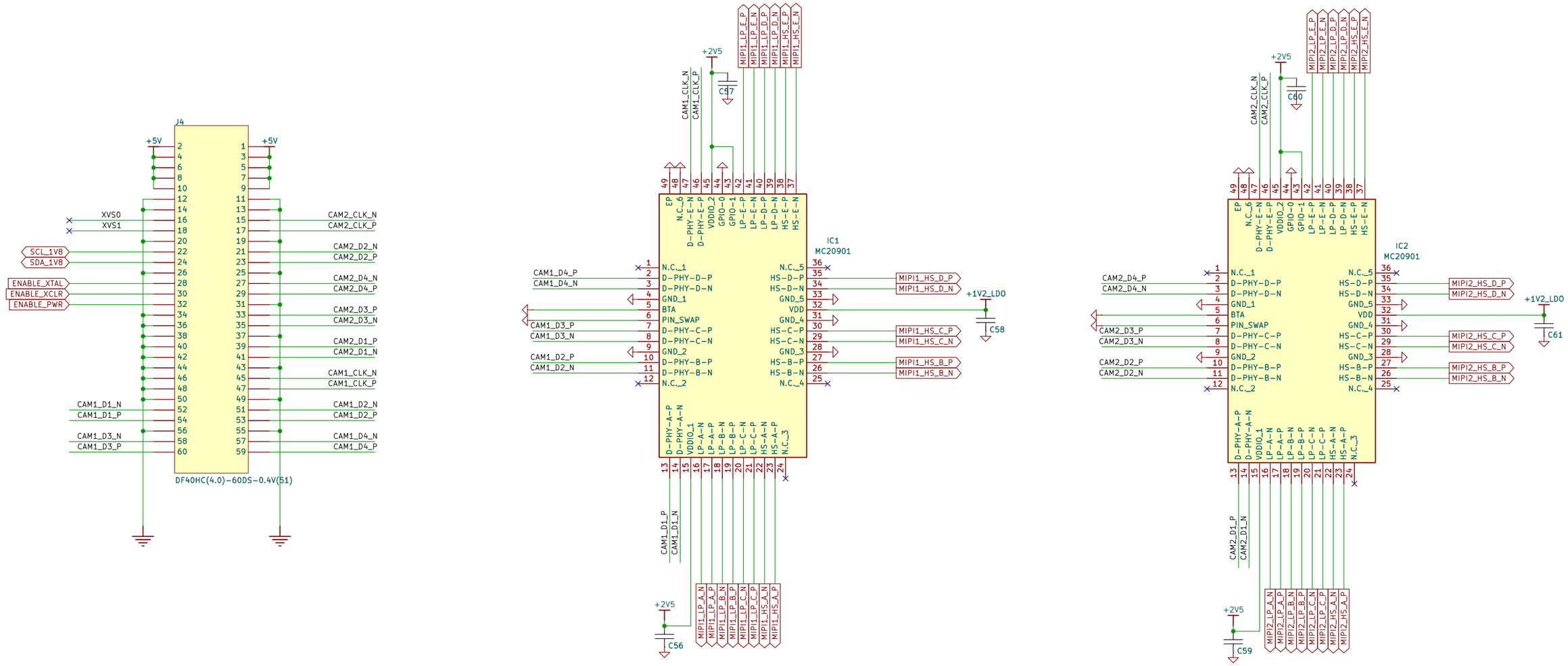

Sheet: /extension/
File: extension.kicad_sch

Title:

Size: A3	Date:	Rev:
KiCad E.D.A. 10.0.0		Id: 4/5

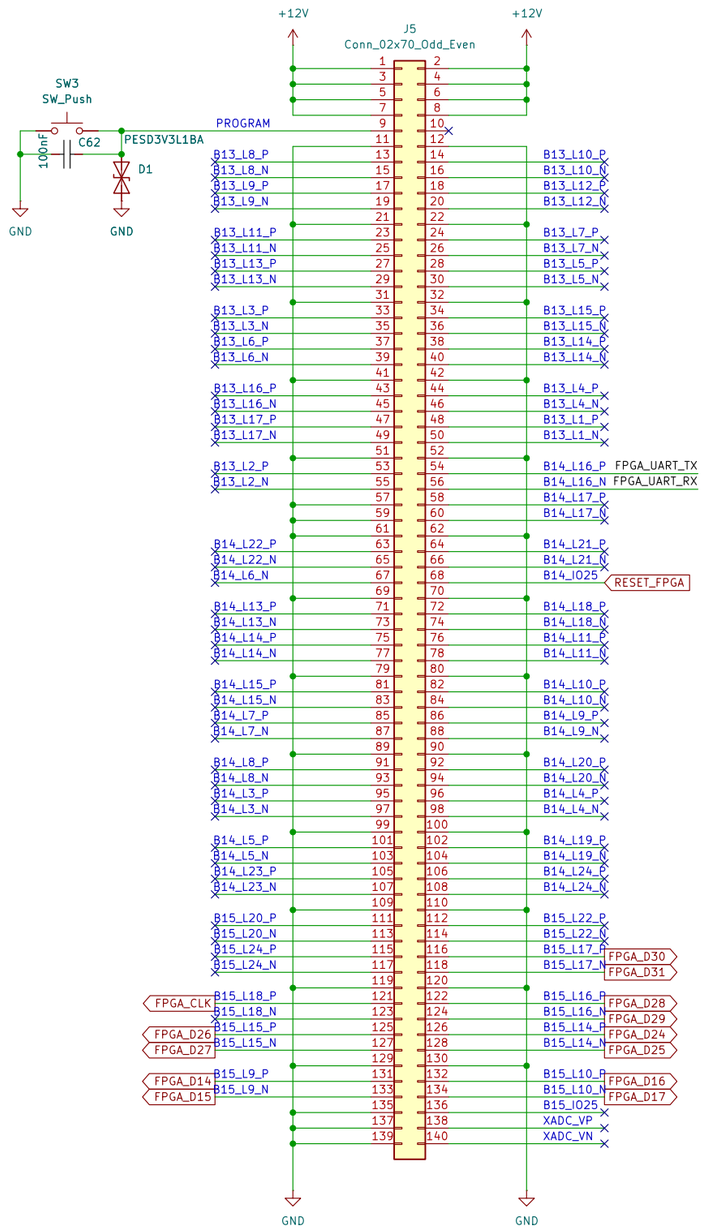

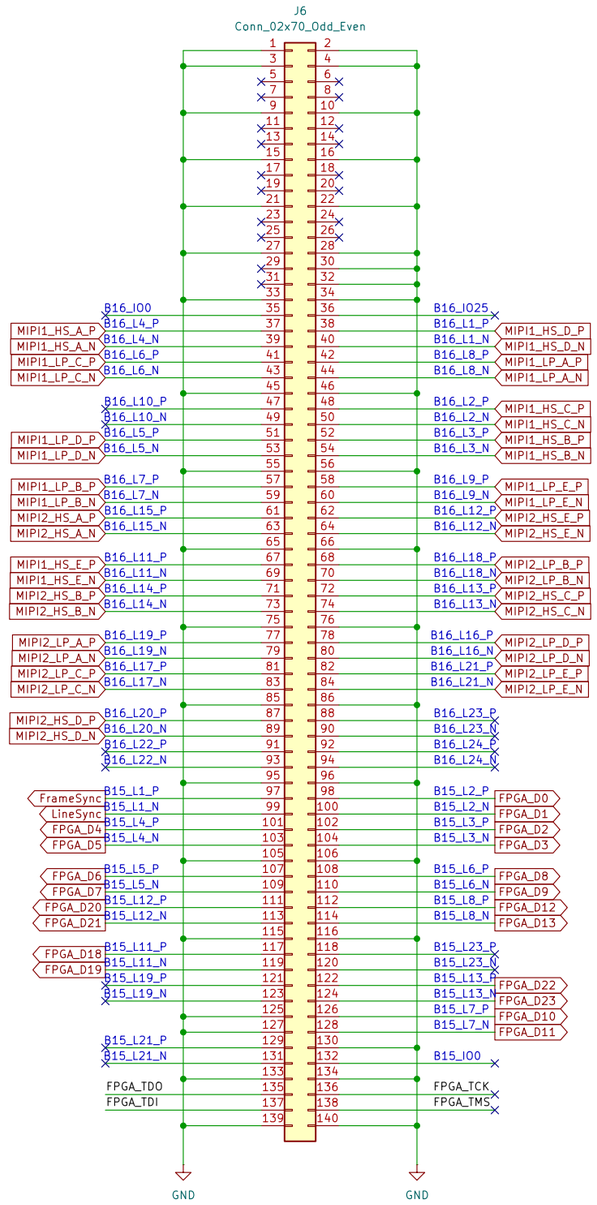

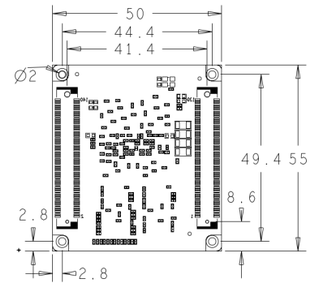

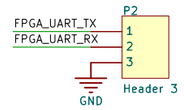

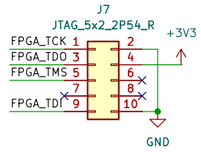

Sheet: /FPGA/
File: FPGA.kicad_sch

Title:

Size: A3	Date:	Rev:
KiCad E.D.A. 10.0.0		Id: 5/5